POWER-HYDRAULIK

PDV

POWER Directional Valve

Scematic

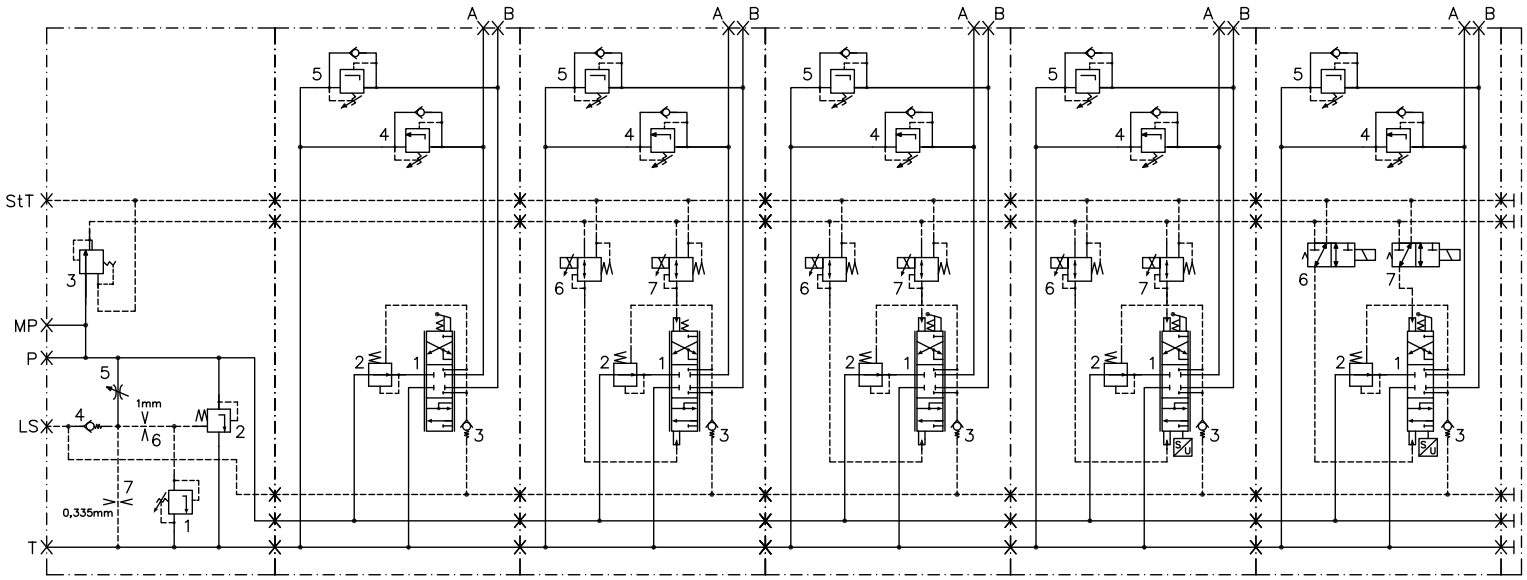

General

The PDV directional valve system is designed in modular sections and combines an input section with up to 10 working sections and one or two end sections. As an alternative specific monoblock units can be flanged for additional functions.
Individual pressure compensators in the sections allow sensitive and load-independent control of the flow with a maximum working pressure of 320 bar, while a maximum flow of up to 80 l/min can be realized.
Each module is capable of load-sensing so that the highest level of working pressure occurring in the system is directed to the input section via check valves where it is then available for energy-saving flow control. Shock valves with anti cavitation function at the working sections are optionally available.
Modules with closed intermediate position allow operation with constant or variable displacement pump. Both versions using lockable input pressure compensators are also available optionally.
For MLT sections, the accuracy of servo valves can be implemented with an integrated displacement sensor and electronics (closed loop). Besides, the Multidrom sections are CAN-BUS capable and can be combined with compatible
MOP sections if additional on-off functions must be implemented. (MOP = without displacement sensor)

Technical data

- Inlet flow: 120 l/min (higher flow available on request)
- Working pressure: 320 bar
- Flow/section: max. 80 l/min (higher flow available on request)
- Type of actuation: Manual lever, on-off, proportional open loop, proportional closed loop
- Stand-by pressure: min. 14 bar
- Leakage (A,B to T) without shock valves: 20 ml/min, 25 ml/min with shock valves, measured at oil temperature of 40°C and ΔP of 100 bar (additional check valves available on request)
- Pilot pressure return via separate tank port (stT)
- Port size P & T: G ¾“
- Port size A & B: G ½“
- Port size LS, stT & M: G ¼“
- SAE ports on request
- Temperature range: -25° to +95°C
- Viscosity: 3<mm²/s<648
- Degree of contamination: max. 18/15/10 (ISO 4406)
- Seals: Buna (Viton on request)
- Corrosion protection: 72h salt spray test

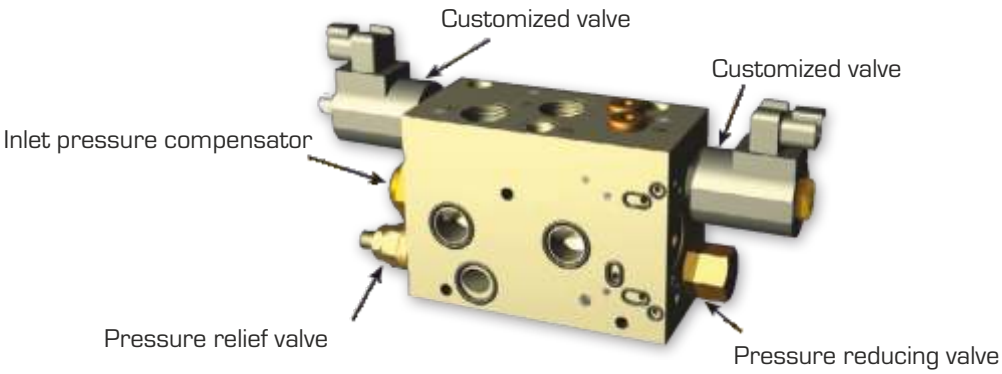

Inlet sections

8 different input sections are available. They are made out of GJS 400 and nitrocarburized including fastening threads M10 (2 pcs):

1. IFOL G34
Left side input section for max. inlet flow of 90 l/min. Valve sections can be flanged in one direction. Operation with variable displacement pump. Use if only one working section is operated with over 40 l/min parallel to others.

2. IFCL G34
Left side Input section for max. inlet flow of 90 l/min. Valve sections can be flanged in one direction. Operation with fixed displacement pump. Use if only one working section is operated with over 40 l/min parallel to other.

3. IFCOL G34
Left side input section for max. inlet flow of 90 l/min. Valve sections can be flanged in one direction. Operation with fixed displacement or variable displacement pump (inlet pressure compensator can be locked). Use if only one working section is operated with over 40 l/min parallel to others.

4. IFXXXXXL G34
Customized left side input section for max. inlet flow of 90 l/ min. Valve sections can be flanged in one direction. With customized manifolds for additional functions. Use if only one working section is operated with over 40 l/min parallel to others.

5. IFOM G34
Middle input section for max. inlet flow of 120 l/min. Valve sections can be flanged in both directions. Operation with variable displacement pump. Use if several working sections are operated with over 40 l/min in parallel.

6. IFCM G34
Middle input section for max. inlet flow of 120 l/min. Valve sections can be flanged in both directions. Operation with a fixed displacement pump. Use if several working sections are operated with over 40 l/min in parallel.

7. IFCOM G34
Middle input section for max. inlet flow of 120 l/min. Valve sections can be flanged in both directions. Operation with fixed displacement or variable displacement pump (inlet pressure compensator can be locked). Use if several working sections are operated with over 40 l/min in parallel.

8. IFXXXXXM G34
Customized middle input section for max. inlet flow of 120 l/min. Valve sections can be flanged in both directions.With customized manifolds for additional functions. Use if several working sections are operated with over 40 l/min parallel to others.

Ordering code: PDV101 - IFOL G34 - RXX - 0000

PDV101	IFOL G34	RXX	0000
PDV input section	IFOL, IFCL, IFCOL, IFXXXXXL, IFOM. IFCM, IFCOM, IFXXXXXM (Port size: G 3/4")	DBV setting R15 = 150 bar R20 = 200 bar ...	Space for special features

Working sections

5 different working sections are available (compare schematic page 2). They are made of steel and galvanized:

Note: Open loop sections cannot be flanged directly to closed loop sections. If a combination is still required, a middle input section must be used.

1. MLM-Section

- Manual lever section for manual control
- Angle Manual lever: +/- 15 degrees
- Dead zone: +/- 3 degrees
- Angle for proportional control: +/- 12 degrees
- Actuating force from the neutral position: 2 kg
- Actuating force for maximum stroke: 2.8 kg
- Weight: 3.7 kg

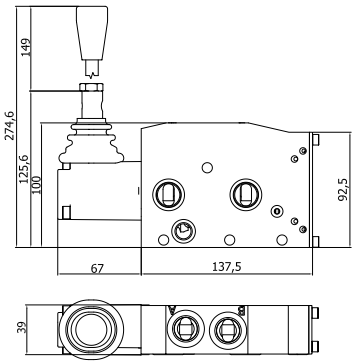

MLM-Section

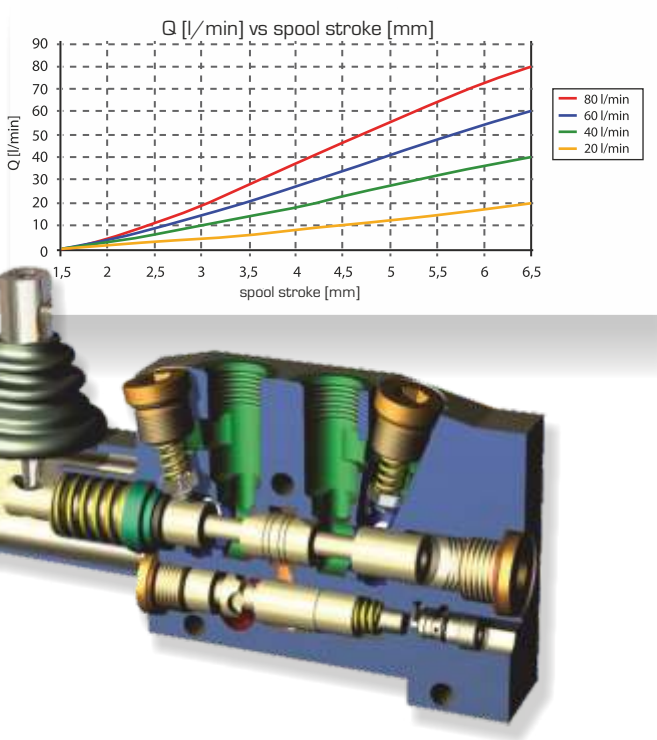

2. MPP-Section

- Proportional section, open loop (without electronics)
- Pilot pressure, control range: 10-25 bar
- Activation by PWM signal
- Also to be operated as on-off section
- Solenoid voltage: 12/24 V
- Solenoid connector: Deutsch (IP67), AMP Junior Timer (IP65)
- Type of protection: Depending on the connector
- Weight: 3.8 kg

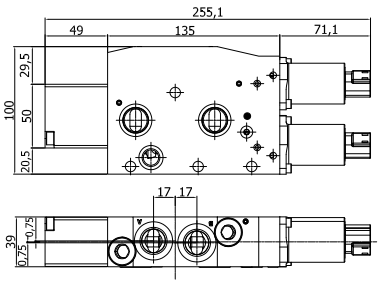

MPP-Section

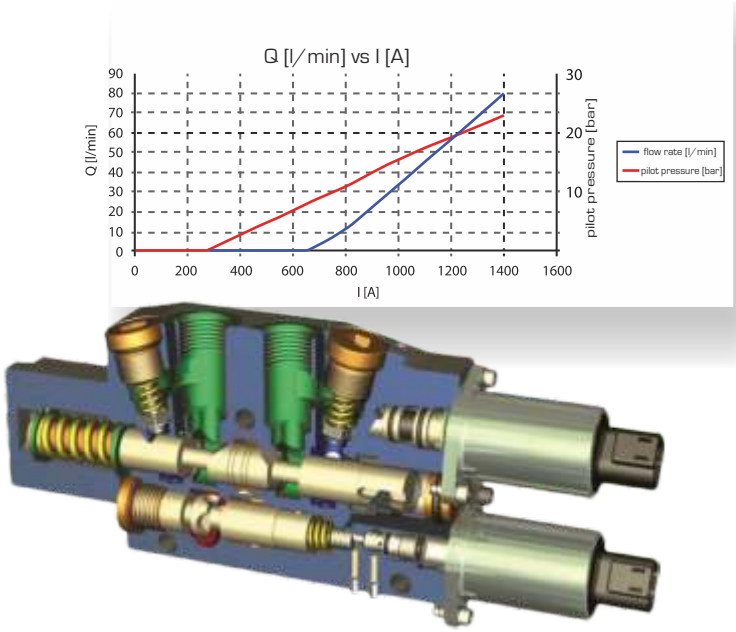

3. MPM-Section

- Proportional section, open loop (without electronics), with manual lever
- Pilot pressure, control range: 10-25 bar
- Activation by PWM signal
- Also to be operated as on-off section
- Solenoid voltage: 12/24 V
- Solenoid connector: Deutsch (IP67), AMP Junior Timer (IP65)
- Type of protection: Depending on the connector
- weight: 3.9 kg

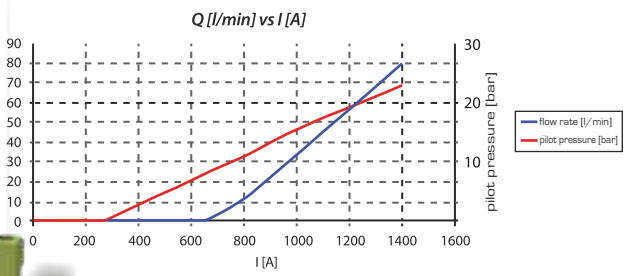

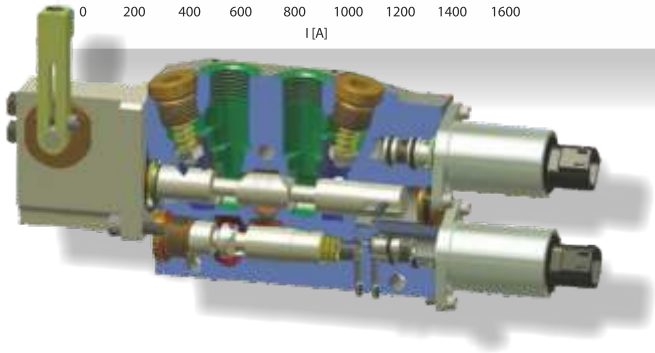

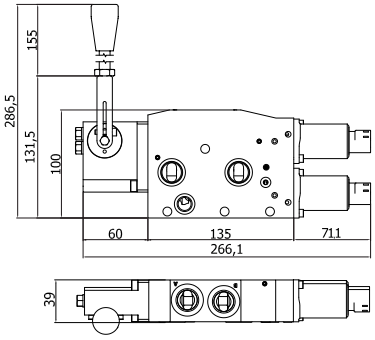

MPM-Section

4. MLT-Section

- Proportional section, closed loop, with manual lever
- With integrated position monitoring of the spool by sensor and electronics (Multidrom)
- Control accuracy is comparable with servo valves
- Activation signal analog or CAN bus
- Optional: Feedback of the spool position
- Solenoid voltage: 12/24 V
- Solenoid connector: Deutsch
- Type of protection: IP67
- Weight: 4 kg

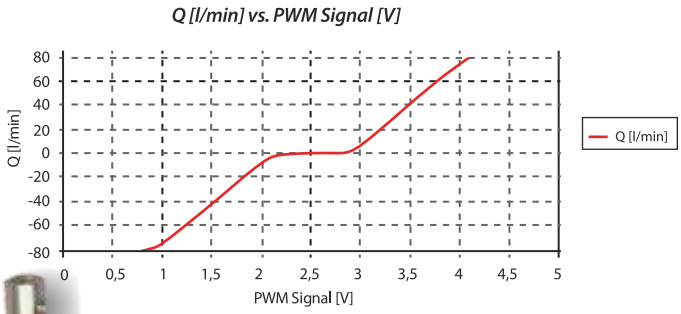

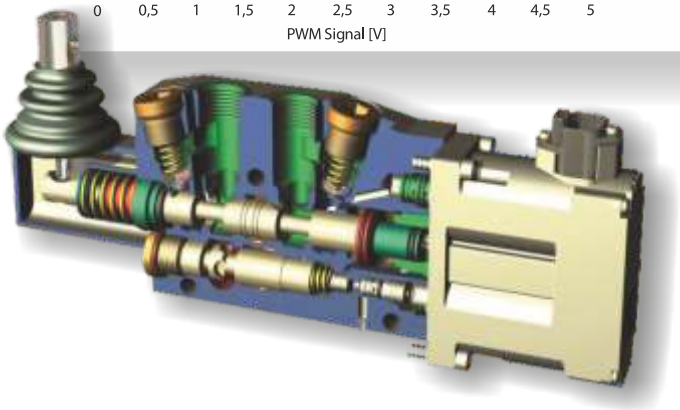

5. MOP-Section

- on-off section, closed loop, with manual lever
- Solenoid voltage: 12/24V
- Solenoid connector: Deutsch
- Type of protection: IP67
- Weight: 4 kg
- Identical to MLT, without sensor

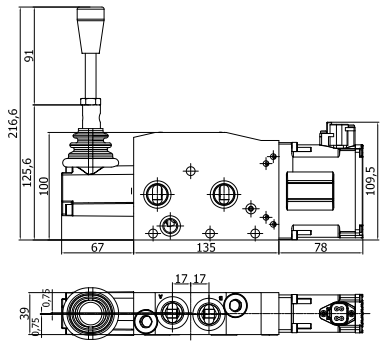

MLT und MOP-Section

Spool configurations

X

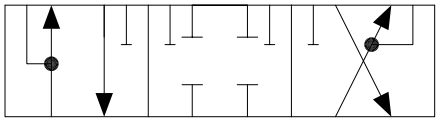

X = cylinder spool

Y

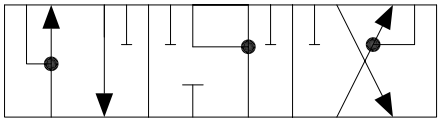

Y = motor spool

K

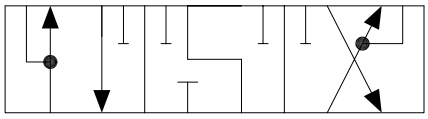

K = A to T, P + B locked

S

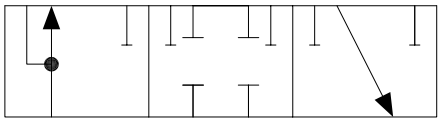

S = single acting spool

Spool sizes

20 = 0-20 l/min
40 = 0-40 l/min
60 = 0-60 l/min
80 = 0-80 l/min

Shock valves

- Pressure relief valves are available with integrated anti cavitation function as shock valves in the ports A and B for all working sections.
- Valves setting: fixed
- In case of only one shock valve, the second cavity is closed with a plug.

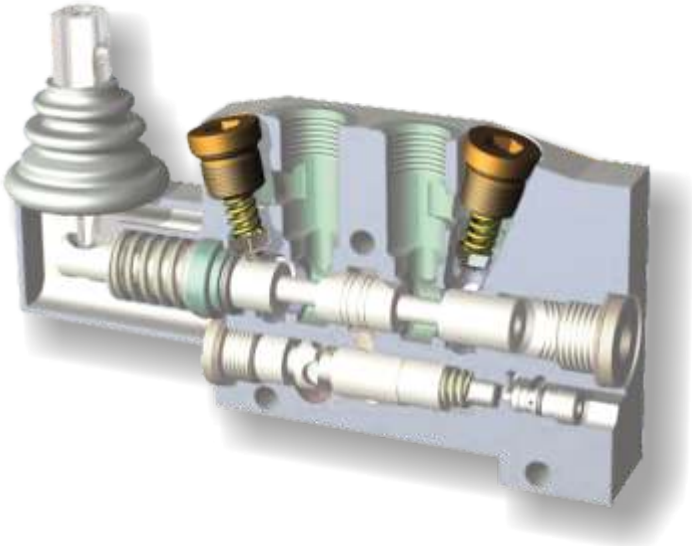

Ordering code: PDV102 - MLT 612 - Y40 - A07B25 - 12DT - 0000

PDV working section

MLM, MPP, MPM, MLT, MOP
(Port size: G 1/2")

X,Y,K,S = spool typ
20 = 0-20 l/min
40 = 0-40 l/min
60 = 0-60 l/min
80 = 0-80 l/min

A00 = without shock valve in A
B00 = without shock valve in B
AXX = valve setting in A
BXX = valve setting in B
for example A07 = 70 bar in A
for example B25 = 250 bar in B

Voltage
12V
24V

Connector
DT = Deutsch,
JT = Junior Timer
(für MPP + MPM)

Space for special features

MLT and MOP actuator

Electrohydraulic proportional actuator for PDV sections. The closed loop guarantees that the spool of the PDV working section reaches the specified position with an accuracy which is comparable to a servo valve. The integrated Hall-effect sensor compares the spool position continuously in a non-contact manner to the value specified by a potentiometer, joystick or machine management system. Compatible with analog or CAN-bus activation (J1939 or CAN 2.0b).

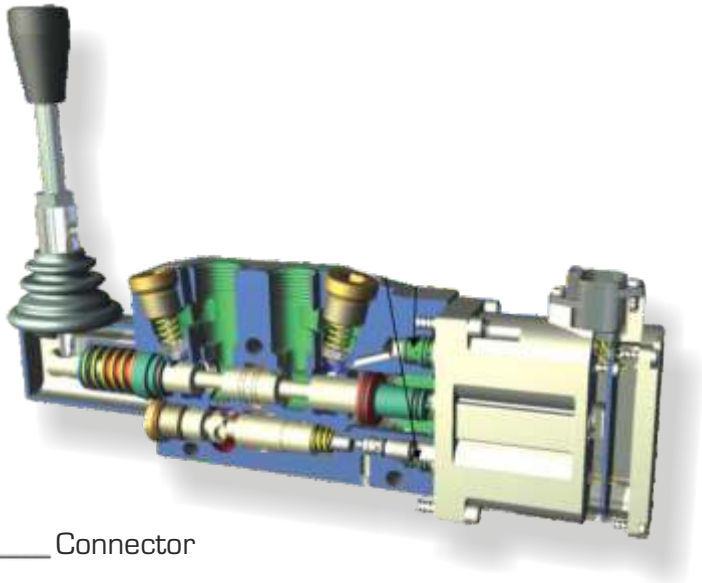

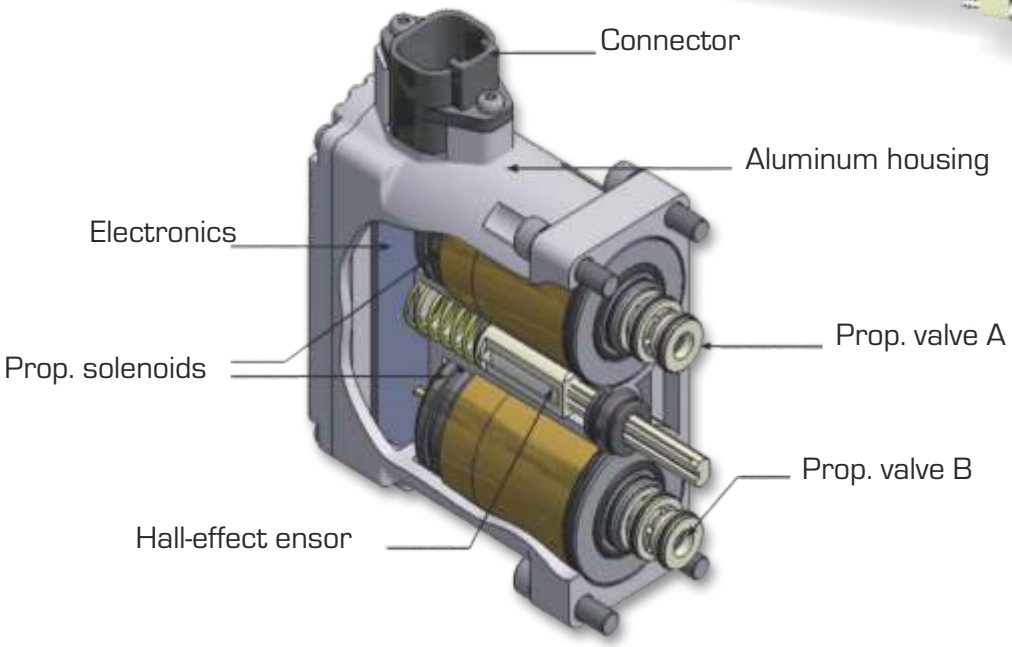

Test characteristic and electrical specification (analog)

- Operating voltage: 8-30 Vdc
- Rated current: 750 mA
- Operating temperature: -20 to 105°C
- Analog input resistance: <40 kOhm
- Typical resistance of control potentiometer: 10 kOhm
- Analog input signal: 0 to 5V
- Connector: Deutsch
- Type of protection: IP67

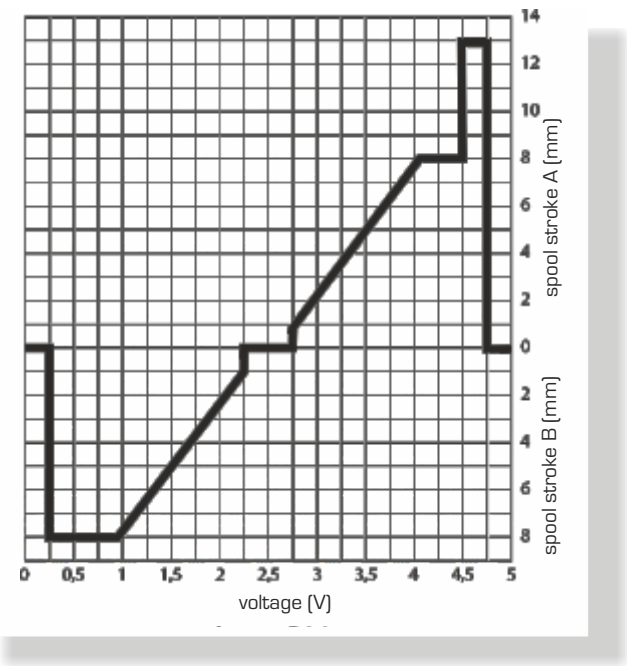

PIN assignment

1. Power supply+
2. Do not connect
3. Control signal
4. Power supply -

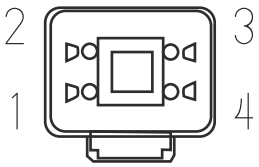

Available actuators

- MLT/FD5-D/A5: Proportional actuator with digital electronics, analog control signal with control device (e.g. potentiometer), with additional 5 V power supply for the control device.
- MLT/FD5-D/A0: Proportional actuator with digital electronics, analog control signal of the control device (e.g. potentiometer)
- MLT/FD5-D/AF: Proportional actuator with digital electronics, analog control signal of the control device (e.g. potentiometer), feedback of the spool
- position 4Q 2011.1
- MLT/FD5-D/C0: Proportional actuator with digital electronics, CAN-bus protocol J1939
- MLT/FD5-A/A5: Proportional actuator with analog electronics, analog control signal with control device (e.g. potentiometer), with additional 5 V power supply for the control device.
- MLT/FD5-0-12: On-off activation, 12 V (only for MOP sections)
- MLT/FD5-0-24: On-off activation, 24V (only for MOP sections)

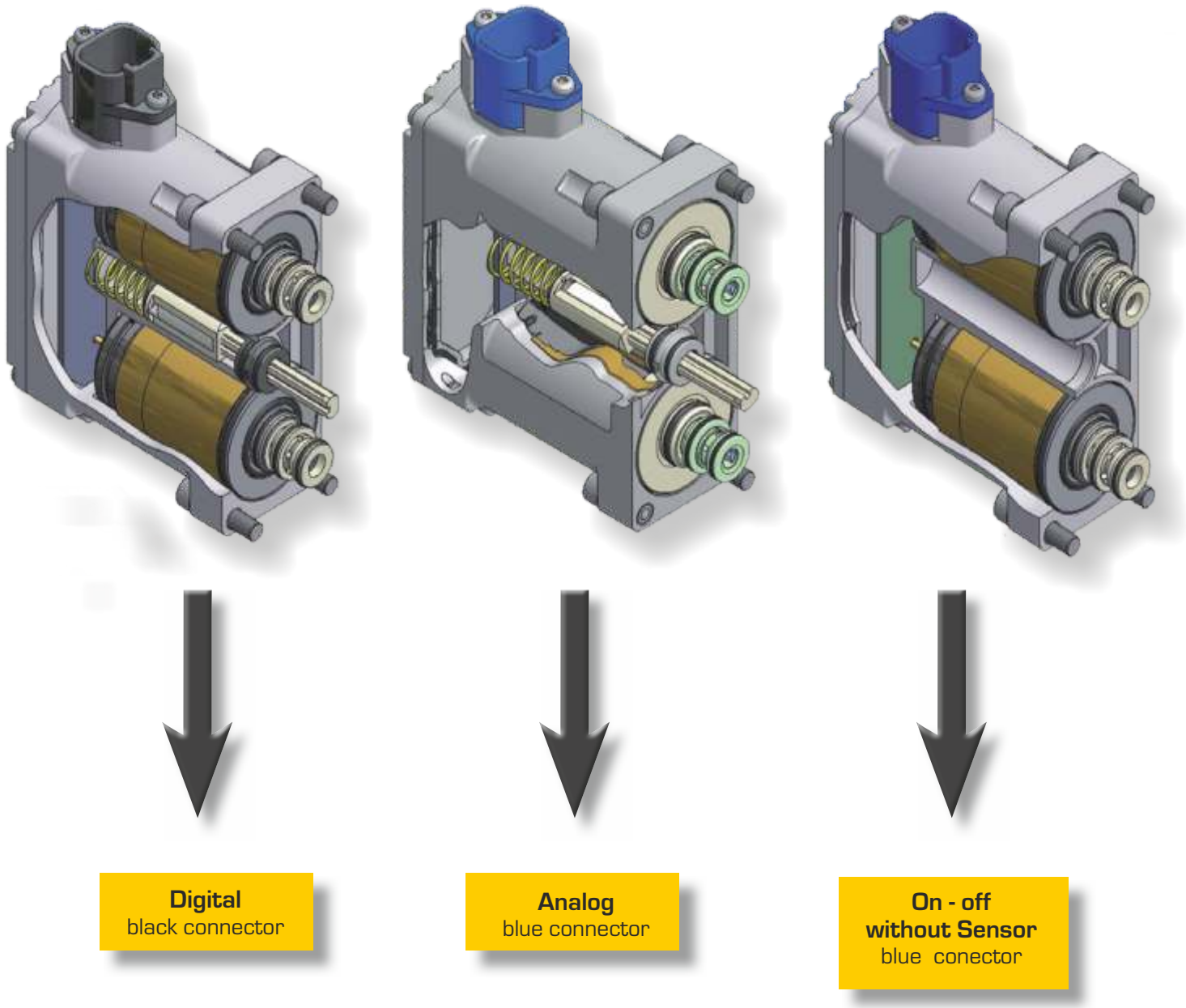

End sections

You can choose between a standard (EFC) and a customized (EXXXXX) end section with additional functions. They are made out of GJS 400 and nitrocarburized. Fastening threads M10 (2x).

Ordering code: PDV101 - EFC

PDV-End section

EFC, EXXXXX

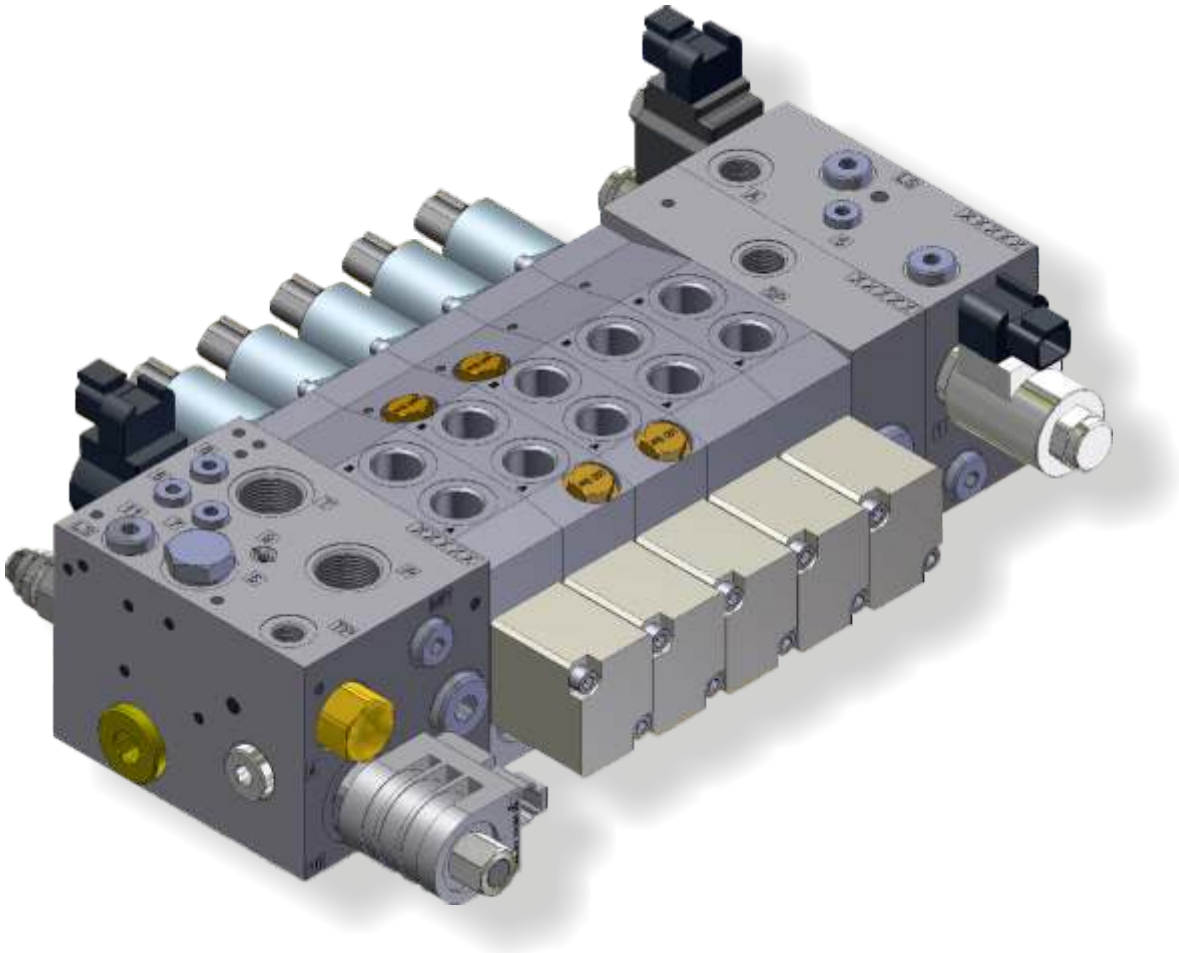

Application example

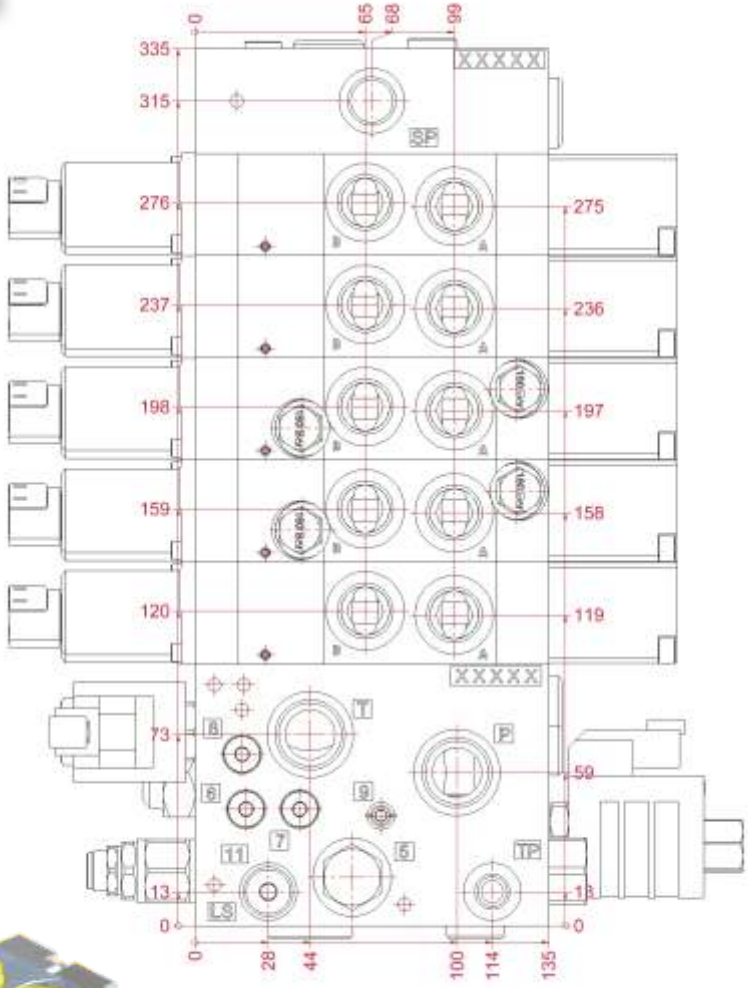

Order code Complete system / Order form

Annual amount	Delivery lot

Input section

1.	PDV101	-	-	-	

Working sections

2.	PDV102	-	-	-	-
3.	PDV102	-	-	-	-
4.	PDV102	-	-	-	-
5.	PDV102	-	-	-	-
6.	PDV102	-	-	-	-
6.	PDV102	-	-	-	-
7.	PDV102	-	-	-	-
8.	PDV102	-	-	-	-
9.	PDV102	-	-	-	-
10.	PDV102	-	-	-	-

Actuator configuration (only for MLT)

The MOP actuator is adjusted correspondingly to the MLT section.

	MLT/FD5	-

End section

	PDV103	-

Please send this formular with your contact data to power@power-hydraulik.de. We will be glad to prepare the corresponding offer for you. To discuss special solutions or clarify existing questions, you can contact us directly under +49 (0)7454 95840.

POWER-HYDRAULIK

Agencies abroad

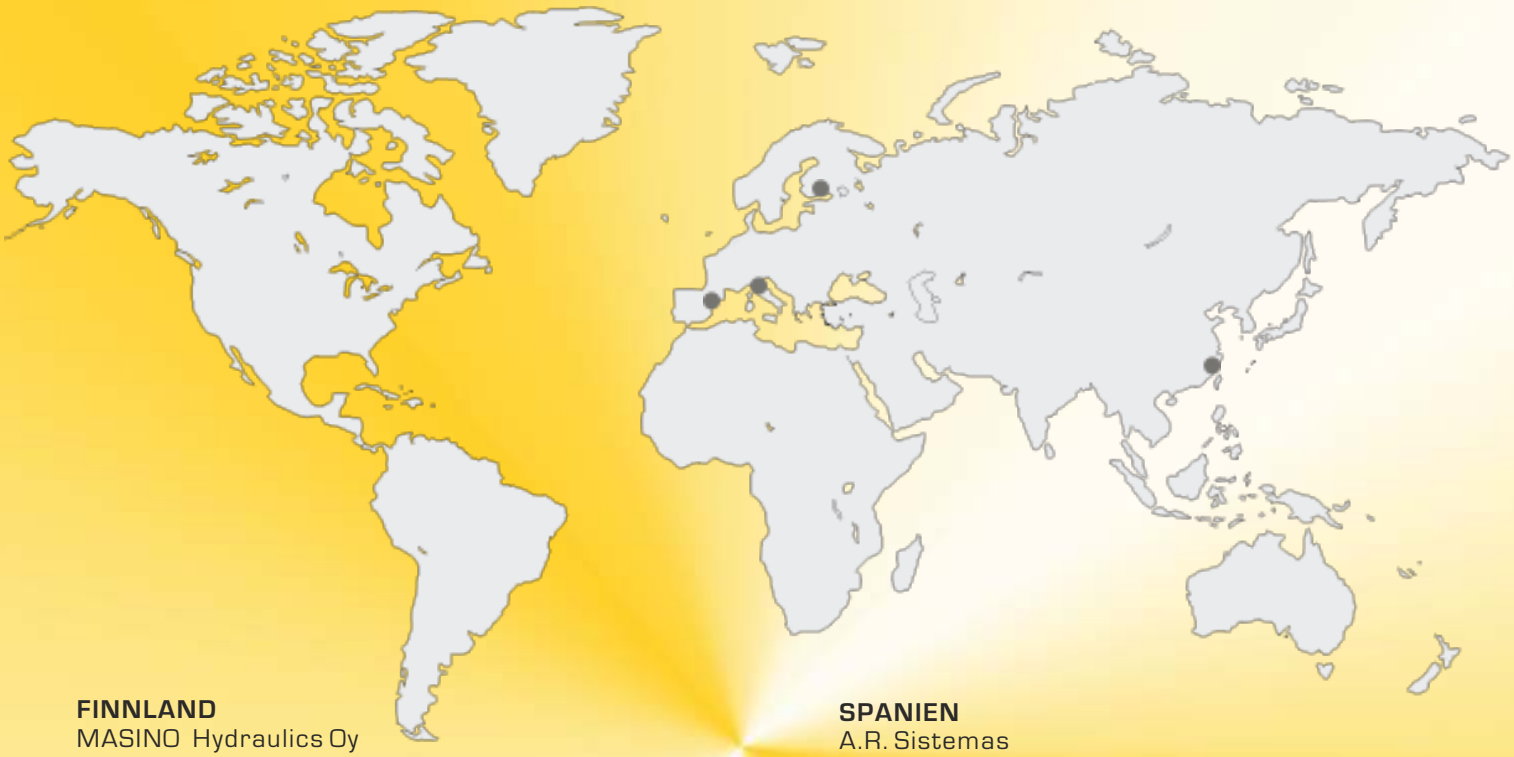

FINNLAND
MASINO Hydraulics Oy
Tiilitie 3
SF-01720 Vantaa
Tel: +358 10 8345 500
Fax: +358 10 8345 669
Email: hydraulics@masino.fi
www.masino.fi

ITALIEN
Nord Fluid S.p.A.
Via Keplero, 24
IT-20019 Settimo Milanese (MI)
Tel. +39.02.3397941
Fax. +39.02.38101388
Email: info@nordfluid.it
www.nordfluid.it

SPANIEN
A.R. Sistemas
Parc Tecnológic del Vallés
Ronda Can Fatjó, No. 19A
E-08290 Cerdanyola del Vallés(Barcelona)
Tel. +34 93 - 675 25 05
Fax: +34 93 - 675 09 60
Email: ar@arsistemas.net
www.arsistemas.net

CHINA
Shanghai ZhenJun Mould Technology Co.,Ltd.
Room 1608, No.2063, KongJiang Road,
YangPu District
CN - Shanghai
Tel. + 86 21 33 77 68 80
Fax: +86 21 33 77 68 27
Email:zhenjunmould@163.com

Edition: 3.01-2015-10-147

POWER-HYDRAULIK GmbH Gottlieb-Daimler-Straße 4 72172 Sulz am Neckar
Tel. +49 7454 9584-0 power@power-hydraulik.de www.power-hydraulik.de